DATA MODELING

WHAT IS DATA MODELING ?

*"Data modeling is the **process of creating** a simplified **diagram** of a software system and the data elements it contains, using text and symbols **to represent the data and how it flows.**"*

– TECHTARGET

*"Data modeling is the **process of creating** a **visual representation** that defines the information collection and management systems of any organization. This blueprint or data model **helps different stakeholders** to create a **unified view** of the **organization's data"***

– AWS

*"Data modeling is the **process of creating visual representations** of whole systems or parts to show connections between data points and structures. The goal is to **show the types of data** stored in the system, **their relationships**, and the **formats** and **attributes of the data.**"*

– DASCA

*"Data modeling is the **process of creating** a **visual representation** of the **structure** and **relationships** within a dataset, aiming **to organize** and **standardize** data for effective **analysis**, **interpretation**, and **communication**."*

– ChatGPT

DATA MODELING TYPES

1. **CONCEPTUAL DATA MODEL**
   Try to abstractly explain **what is going on** in the business. Shows the key entities and relationships but not delving into details. It could use **only business terms**. It is used to explain the environment to **non-technical stakeholders**.
2. **LOGICAL DATA MODEL**
   It serves as a **bridge** between the conceptual model and the physical model and **it could be independent** of physical data storage considerations. Includes entity, relationships and attributes but not technical details as data types.
3. **PHYSICAL DATA MODEL**
   Includes all technical details such as **tables, columns, data types and constraints**. It also includes primary and foreign keys (some definitions put these in the logical model), **indexes** and other database features. It depends a lot on the technology chosen and to build it you also should consider arguments like **performances**, **efficiency** and **storage** dimensions.

Conceptual Model Design

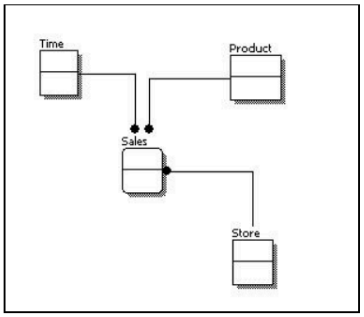

Logical Model Design

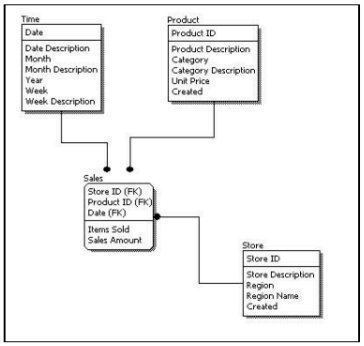

Physical Model Design

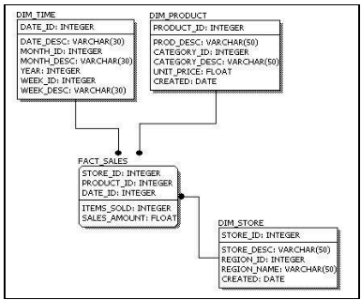

QUESTION TO ASK YOURSELF BEFORE/DURING DATA MODEL REALIZATION

Conceptual Data Model

1. Which is the purpose of the data structure?
2. Who are the stakeholders involved and what are their requirements?
3. What are the elements of the domain to represent?
4. Which are the relationships between these elements?
5. What are the main activities or processes that interact with the data?
6. What are the possible issues of the domain?

Logical Data Model

7. Which are the attributes of every entity?
8. Are there any business rules or constraints that need to be represented in the model?
9. How can we identify each element and with what type of relationship can we connect it to the others? (PK - FK)
10. How far do we want to abstract things? How much do we need to generalize (Employees,Customers,Consultants or Persons?)
11. Do we need a normalized or denormalized data structure? (see below)
12. Are validation rules needed to ensure data integrity?

Physical Data Model

13. Which DBMS will be used for the implementation?
14. Which are the data types of every attribute of every entity and which are nullable or not?
15. How much data do we need to retain and how much storage do we need to guarantee this?
16. Which kind of indexes do we need to guarantee the performance requirements?
17. How can we guarantee scalability, security and redundancy?

18. Which kind of maintenance operations will our data system need?

PURPOSE OF MODELING

OLTP (Online Transactional Processing): Designed primarily for **daily operation** and **transactions** using **highly normalized** data structures with **low data redundancy** and **high integrity**. It is focused on **fasted** data **insertion, modification** and **small retrieval**

OLAP (Online Analytics Processing) : Designed for **analysis** and **decision making** or for BI apps using **denormalized schemas** allowing **complex queries** and **aggregations**

NORMALIZATION VS DENORMALIZATION

Normalization : Process act to **reduce data duplication** and **improve data integrity**. It involves structuring our database in such a way that dependencies among the **data are minimized**, **dividing** the database **into multiple tables** and defining **relationships** between them.It is also focused on saving storage space. It is a common pattern of **OLTP** systems and it can be achieved with the use of the **normal forms**.
Normal forms are steps that are used to reduce duplication→ the higher the degree of normal form, the less duplication and the greater the data integrity.

- **1NF**
  - **No repeating groups** or array in a single record
  - Each field must contain **only a single value**
  - **Data order doesn't affect the integrity**
  - Attribute domain does not change
- **2NF**
  - 1NF
  - **Remove partial dependency**→ A non-key attribute should depend on the whole primary key
- **3NF**
  - 2NF
  - Eliminate fields that **do not directly depend on the primary key**
  - **Separate data into different tables** where each table should be about a specific topic. **All non-key are independent of each other** and only directly related to the primary key and no other fields.

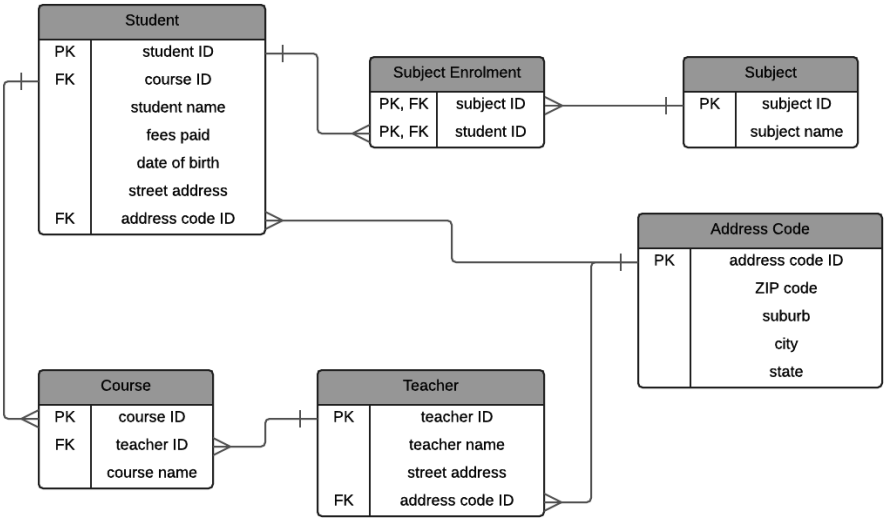

Denormalization: Process act to **increase performance** by adding redundancy. It involves **consolidation data** from multiple tables **into fewer tables**, **reducing** the need of **complex joins and queries** at the cost of **duplication** and **inconsistency.** It is a common pattern of **Data Warehousing** where the data systems are **very read heavy** and the focus was **reduces the need of joins**

- **OBT** (One Big Table) : Join all of the data necessary for analytics into wide denormalized tables

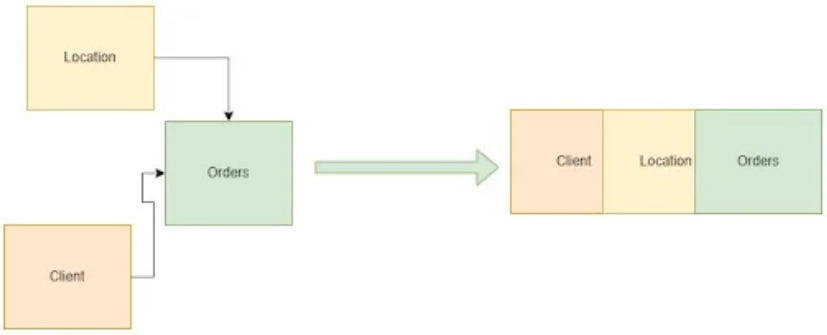

- **Star Schema :** Type of data modeling used to represent data in a structured and intuitive way. It is characterized by a structure of few tables wheres one is the central one (or few) and it is called **fact table** surrounded by **dimensions tables** that describe its attributes
    - **Fact Table :** *Primary table in a dimensional model where the **numerical performance measurements** of the business are stored*

      – Ralph Kimball
    - **Dimension Tables :** Tables that contain the **descriptive attributes** of the measures in the fact and allow users to analyze data from **different perspectives** (who, what, where, when, how, why)

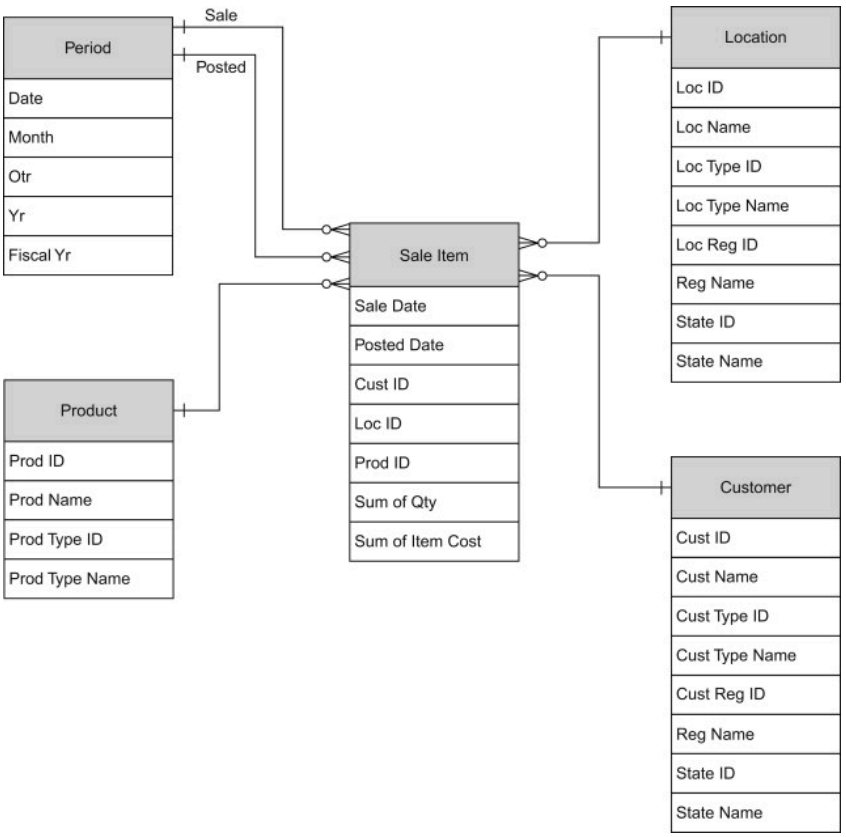

TOOLS FOR DATA MODELING (NoAdv)

ER/Studio : Data modeling tool that lets you identify your data assets and sources and can construct and share data models. You can realize logical and physical models

DbSchema : Is a universal database designer and GUI tool that provides a diagram oriented database designer for relational and No-SQL databases.

Erwin : Widely used tool that supports the creation of conceptual, logical and physical data models. It provides features for forward and reverse engineering with various database platforms

Archi: A cost-effective cross-platform solution